Neap

Trial Examination 2023

VCE Specialist Mathematics Units 3&4

Written Examination 2

Suggested Solutions

SECTION A – MULTIPLE-CHOICE QUESTIONS

1	A	**B**	C	D	E	11	**A**	B	C	D	E
2	A	B	C	**D**	E	12	A	B	**C**	D	E
3	A	B	C	D	**E**	13	**A**	B	C	D	E
4	A	B	C	**D**	E	14	A	B	**C**	D	E
5	A	B	**C**	D	E	15	A	B	C	**D**	E
6	**A**	B	C	D	E	16	A	B	C	**D**	E
7	A	**B**	C	D	E	17	A	B	C	D	**E**
8	A	B	**C**	D	E	18	A	B	C	D	**E**
9	A	**B**	C	D	E	19	A	B	C	D	**E**
10	A	B	C	**D**	E	20	A	B	C	**D**	E

Neap® Education (Neap) Trial Exams are licensed to be photocopied or placed on the school intranet and used only within the confines of the school purchasing them, for the purpose of examining that school's students only for a period of 12 months from the date of receiving them. They may not be otherwise reproduced or distributed. The copyright of Neap Trial Exams remains with Neap. No Neap Trial Exam or any part thereof is to be issued or passed on by any person to any party inclusive of other schools, non-practising teachers, coaching colleges, tutors, parents, students, publishing agencies or websites without the express written consent of Neap.

Copyright © 2023 Neap Education Pty Ltd ABN 43 634 499 791 Level 1 223 Hawthorn Rd Caulfield North VIC 3161 Tel: (03) 9639 4318

Question 1 B

Sketching the graph of $f(x)$ using a CAS calculator gives:

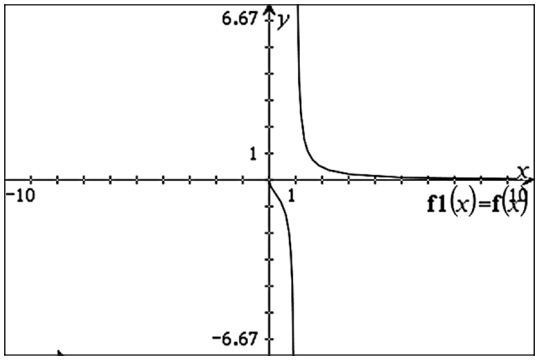

Thus, finding the solutions of $f(x)$ when $x \geq 0$ gives:

$$f(x):=\frac{\sqrt{x}}{x^2-1} \qquad \textit{Done}$$

$$\text{solve}\left(\frac{d^2}{dx^2}(f(x))=0,x\right)|x\geq 0$$

$$x=\frac{\sqrt{15\cdot\left(4\cdot\sqrt{6}-9\right)}}{15}$$

Since $\dfrac{d^2}{dx^2}$ has one solution in its domain, the graph has one inflection point.

Question 2 D

D is correct. Letting P represent 'n divisible by 10' and Q represent 'n divisible by 5' gives 'if P, then Q'. Therefore, the converse of this statement is 'if Q, then P', or 'if n is divisible by 5, then it is divisible by 10'.

A is incorrect. This statement is 'if not P, then Q'.

B is incorrect. This statement is 'if not P, then not Q'.

C is incorrect. This statement is 'if P, then not Q'.

E is incorrect. This statement is 'if not Q, then not P'.

Question 3 E

Using a CAS calculator gives:

$$\frac{|0-2\cdot 0+3\cdot 0-5|}{\sqrt{1^2+(-2)^2+3^2}} \qquad \frac{5\cdot\sqrt{14}}{14}$$

$$\frac{5\sqrt{14}}{14}=\frac{5}{\sqrt{14}}$$

Copyright © 2023 Neap Education Pty Ltd

Question 4 D

Given that $\tan\left(-\frac{3\pi}{4}\right)=1$:

$$\frac{a}{5}=1$$
$$a=5$$

Question 5 C

C cannot be correct and is therefore the required response. Since complex roots occur in conjugate pairs, there must be an odd number of real roots. It is given that $3 - i$ is a root.

A can be correct and is therefore not the required response. $3 - i$ is a root.

B can be correct and is therefore not the required response. By the conjugate root theorem, $3 + i$ is also a root.

D and **E** may be correct and are therefore not the required response. There are two possibilities for the remaining three roots.

- Two of the roots are non-real (conjugate points) and one is real. Hence, $P(z) = 0$ has one real root only. Therefore, **D** might be correct.
- All three roots are real. Hence, $P(z) = 0$ has two non-real roots. Therefore, **E** might be correct.

Question 6 A

Using complementary angles gives:

$$\begin{aligned} z &= \sin(\theta) - i\cos(\theta) \\ &= \cos\left(\frac{\pi}{2}-\theta\right) - i\sin\left(\frac{\pi}{2}-\theta\right) \\ &= \cos\left(\theta-\frac{\pi}{2}\right) + i\sin\left(\theta-\frac{\pi}{2}\right) \end{aligned}$$

$$\begin{aligned} z^6 &= \cos(6\theta-3\pi) + i\sin(6\theta-3\pi) \\ &= \cos(6\theta-\pi) + i\sin(6\theta-\pi) \\ &= \cos(\pi-6\theta) - i\sin(\pi-6\theta) \\ &= -\cos(6\theta) - i\sin(6\theta) \end{aligned}$$

Question 7 B

Using a CAS calculator gives:

$a:=[1\ \ -3\ \ 2]$	$[1\ \ -3\ \ 2]$
$b:=[6\ \ -7\ \ 2]$	$[6\ \ -7\ \ 2]$
$\frac{180}{\pi}\cdot\cos^{-1}\left(\frac{\lvert\text{dotP}(a,b)\rvert}{\text{norm}(a)\cdot\text{norm}(b)}\right)$	28.5718

Copyright © 2023 Neap Education Pty Ltd

Question 8 C

$u = 1 - x$

$du = -dx$

$x = 1 - u$

Therefore:

$$-\int_1^0 (2-u)\sqrt{u}\,du = \int_0^1 (2u^{\frac{1}{2}} - u^{\frac{3}{2}})du$$

Question 9 B

Considering the second derivative and finding the values of a that will give a positive discriminant gives:

$f(x):=a\cdot x^4-3\cdot x^3-5\cdot x^2$	*Done*
$fdd(x):=\frac{d^2}{dx^2}(f(x))$	*Done*
$fdd(x)$	$12\cdot a\cdot x^2-18\cdot x-10$

$\text{solve}\left((-18)^2-4\cdot 12\cdot a\cdot -10>0,a\right)$	$a>\frac{-27}{40}$

Question 10 D

Finding the direction vector:

$$\underset{\sim}{v} = (2-1)\underset{\sim}{i} + (1-(-2))\underset{\sim}{j} + (-3-2)\underset{\sim}{k}$$

$$= \underset{\sim}{i} + 3\underset{\sim}{j} - 5\underset{\sim}{k}$$

D does not describe a line that passes through the two points and is therefore the required response. This vector equation does not use a multiple of $\underset{\sim}{v}$ from point (2, 1, –3) or (1, –2, 2).

A describes a line that passes through the two points and is therefore not the required response. This vector equation is reached by multiplying $\underset{\sim}{v}$ by t from point (1, –2, 2).

B describes a line that passes through the two points and is therefore not the required response. This vector equation is reached by multiplying $\underset{\sim}{v}$ by $-t$ from point (2, 1, –3).

C describes a line that passes through the two points and is therefore not the required response. This vector equation is reached by multiplying $\underset{\sim}{v}$ by $2t$ from point (1, –2, 2).

E describes a line that passes through the two points and is therefore not the required response. This vector equation is reached by multiplying $\underset{\sim}{v}$ by $-t$ from point (1, –2, 2).

Copyright © 2023 Neap Education Pty Ltd

Question 11 A

A is correct. Using a CAS calculator to verify the direction field of $\frac{dy}{dx}=\frac{xy}{x-1}$ gives:

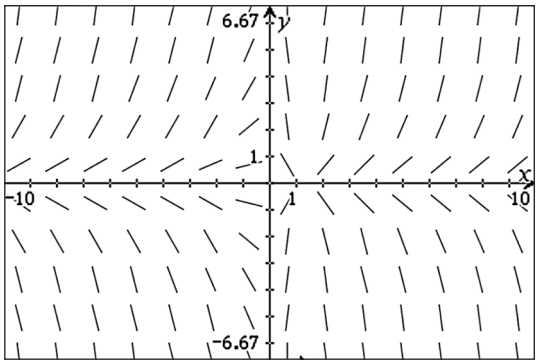

B is incorrect. The direction field shows that $\frac{dy}{dx}>0$ in the second quadrant. However, $\frac{xy}{1-x}<0$.

C and **E** are incorrect. The direction field shows that $\frac{dy}{dx}$ is defined when $y = 1$.

D is incorrect. The direction field shows that $\frac{dy}{dx}=0$ when either x or y is equal to zero. Hence, x and y need to be factors in the numerator.

Question 12 C

$$\begin{aligned}\frac{dm}{dt}&=\text{inflow}-\text{outflow}\\&=(5\text{ grams/L}\times 2\text{ L/min})-\left(\frac{1\text{ gram/L}\times m\text{ grams}}{3\text{ L}+(2\text{ L/min}-1\text{ L/min})t\text{ min}}\right)\\&=(5\times 2)-\frac{1\times m}{3+(2-1)t}\\&=10-\frac{m}{3+t}\end{aligned}$$

Question 13 A

Using a CAS calculator gives:

$a:=[2\ \ 3\ \ p]$	$[2\ \ 3\ \ p]$
$b:=[3\ \ -2\ \ 4]$	$[3\ \ -2\ \ 4]$
$c:=[1\ \ -2\ \ q]$	$[1\ \ -2\ \ q]$
$\text{solve}(a=m\cdot b+n\cdot c,m,n)$	$m=\frac{7}{4}$ and $n=\frac{-13}{4}$ and $p=\frac{-(13\cdot q-28)}{4}$

Question 14 C

Using a CAS calculator gives:

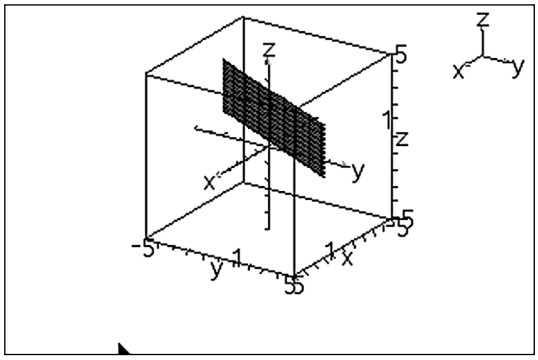

In three dimensions, $y = 2x + 1$ means that for any valid (x, y) pair, the z-coordinate can be any number. The plane will be parallel to the z-axis since (x, y) pairs are independent of z.

Question 15 D

The features of the graph need to be investigated before the correct definite integral expression is set. Using a CAS calculator gives:

$f(x):=\sin^{-1}(2\cdot x-1)$	*Done*
$\text{domain}(f(x),x)$	$0\le x\le 1$
$\text{solve}(f(x)=0,x)$	$x=\frac{1}{2}$

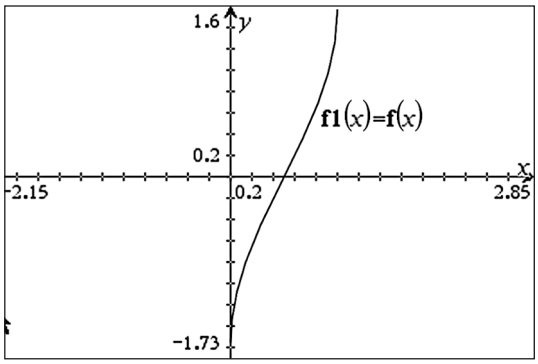

Thus, finding the surface area of the solid of revolution gives:

$$2\cdot 2\cdot \pi\cdot \int_{\frac{1}{2}}^{1}\left(f(x)\cdot\sqrt{1+\left(\frac{d}{dx}(f(x))\right)^2}\right)dx$$

16.0601

Copyright © 2023 Neap Education Pty Ltd

Question 16 D

Using a CAS calculator gives:

$v(x):=2\cdot\sin(x)$	*Done*
$\frac{1}{2}\cdot\frac{d}{dx}\left((v(x))^2\right)$	$4\cdot\sin(x)\cdot\cos(x)$

$$\begin{aligned}4\sin(x)\cos(x) &= 2\times 2\sin(x)\cos(x)\\ &= 2\sin(2x)\end{aligned}$$

Question 17 E

The given algorithm is used to apply Euler's method to approximate the solution of the differential equation $\frac{dy}{dx}=x^2-3y$.

Entering the following information into a CAS calculator gives:

- function expression: x^2-3y
- independent variable: x
- dependent variable: y
- initial x-value: 3
- final x-value: $3+6\times 0.2=4.2$
- initial y-value: 2
- increment: 0.2

$$\text{euler}\left(x^2-3\cdot y,x,y,\{3,4.2\},2,0.2\right)$$

3.4	3.6	3.8	4.	4.2
.088	3.5472	4.01088	4.49235	4.99694

Question 18 E

Using a CAS calculator gives:

$m:=\frac{95.3+110.6}{2}$	102.95
$z:=-\text{invNorm}\left(\frac{1-0.95}{2},0,1\right)$	1.95996
$\text{solve}\left(m-95.3=\frac{z\cdot s}{\sqrt{80}},s\right)$	$s=34.9107$

Copyright © 2023 Neap Education Pty Ltd

Question 19 E

Using a CAS calculator gives:

$$\text{normCdf}\left(-\infty, 34, 32, \frac{4}{\sqrt{6}}\right) \qquad 0.889664$$

Question 20 D

D is correct. For a one-tailed test performed at a 5% level of significance, H_0 should be rejected if $p < 0.05$. As $0.04 < 0.05$, H_0 should be rejected.

A is incorrect. As $0.005 < 0.05$, H_0 should be rejected.

B is incorrect. As $0.07 > 0.05$, H_0 should not be rejected.

C is incorrect. As $p > 0.06$ is greater than 0.05, H_0 should not be rejected.

E is incorrect. As $p < 0.04$ is less than 0.05, H_0 should be rejected.

Copyright © 2023 Neap Education Pty Ltd

SECTION B

Question 1 (7 marks)

a. **i.** Subtracting the coordinates of A from D gives $\overrightarrow{AD} = -6\underset{\sim}{i} + \underset{\sim}{j} - \underset{\sim}{k}$.

Method 1:

$\underset{\sim}{r} = (2-6t)\underset{\sim}{i} + (-1+t)\underset{\sim}{j} + (6-t)\underset{\sim}{k}$ A1

Method 2:

$\underset{\sim}{r} = (-4-6t)\underset{\sim}{i} + t\underset{\sim}{j} + (5-t)\underset{\sim}{k}$ A1

Note: Students may reach either vector equation depending on the method used.

ii. **Method 1:**

$$2-6t=-10$$
$$t=2$$
$$-1+t=m$$
$$-1+2=m$$
$$m=1$$
$$6-t=n$$
$$6-2=n$$
$$n=4$$

values for m and n A1

Method 2:

$$-4-6t=-10$$
$$t=1$$
$$t=m=1$$
$$5-t=n$$
$$5-1=n$$
$$n=4$$

values for m and n A1

Note: Consequential on answer to ***Question 1a.i.*** *Students should reach the same answer using either method.*

b. The vectors $\overrightarrow{AB}$ and $\overrightarrow{AC}$ can be obtained by subtracting the coordinates of A from B and A from C, respectively.

$\overrightarrow{AB} = 2\underset{\sim}{i} + 9\underset{\sim}{j} - 7\underset{\sim}{k}, \overrightarrow{AC} = -8\underset{\sim}{i} + 4\underset{\sim}{j} - 4\underset{\sim}{k}$ M1

$\overrightarrow{AB} \times \overrightarrow{AC} = -8\underset{\sim}{i} + 64\underset{\sim}{j} + 80\underset{\sim}{k}$ A1

Substituting point A into the vector gives:

$-8(x-2)+64(y+1)+80(z-6)=0$

$-x+8y+10z-50=0$ **OR** $x-8y-10z+50=0$ A1

u:=[2 9 -7]	[2 9 -7]
v:=[-8 4 -4]	[-8 4 -4]
crossP(u,v)	[-8 64 80]
-8·(x−2)+64·(y+1)+80·(z−6)=0	
	-8·x+64·y+80·z−400=0

c. $\underset{\sim}{v} = -6\underset{\sim}{i} + \underset{\sim}{j} - \underset{\sim}{k}$

$\underset{\sim}{n} = -8\underset{\sim}{i} + 64\underset{\sim}{j} + 80\underset{\sim}{k}$

$$\sin^{-1}\left(\frac{|\underset{\sim}{v}\cdot\underset{\sim}{n}|}{|\underset{\sim}{v}||\underset{\sim}{n}|}\right) = \sin^{-1}\left(\frac{2\sqrt{6270}}{3135}\right)$$ M1

$$\approx 2.9°$$ A1

$v:=[-6\ \ 1\ \ -1]$	$[-6\ \ 1\ \ -1]$
$n:=[-8\ \ 64\ \ 80]$	$[-8\ \ 64\ \ 80]$
$\sin^{-1}\left(\frac{\lvert\text{dotP}(v,n)\rvert}{\text{norm}(v)\cdot\text{norm}(n)}\right)$	$\sin^{-1}\left(\frac{2\cdot\sqrt{6270}}{3135}\right)$
$\frac{\sin^{-1}\left(\frac{2\cdot\sqrt{6270}}{3135}\right)\cdot 180}{\pi}$	2.89557

Note: Consequential on answers to ***Questions 1a.i.*** *and* ***1b.***

Question 2 (9 marks)

a.

$f(x):=\frac{x^3-2\cdot x^2}{x^2-5\cdot x+6}$	*Done*
⚠ $\text{expand}(f(x))$	$\frac{9}{x-3}+x+3$

$x = 3$ A1

$y = x + 3$ A1

Note: Deduct a maximum of 1 mark for any additional asymptotes stated.

b. $f(x) = 9(x-3)^{-1} + x - 3$

$f'(x) = -9(x-3)^{-2} + 1$ M1

$f''(x) = 18(x-3)^{-3}$

$$= \frac{18}{(x-3)^3}$$ M1

$f''(x) = 0$ has no solutions. Therefore, $f(x)$ has no points of inflection. M1

Copyright © 2023 Neap Education Pty Ltd

c.

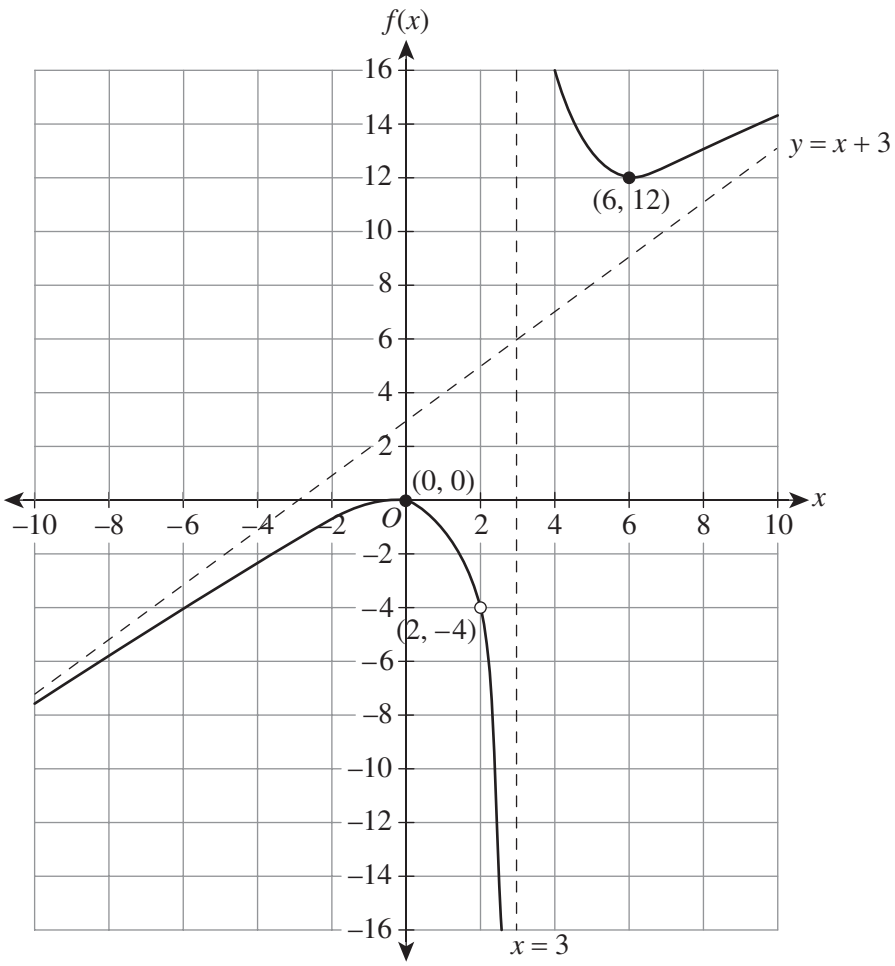

correct shape, including asymptotical behaviour A1
correct asymptotes and key points A1

d. $g(x) = \dfrac{x^2(x+p)}{x^2+qx+r}$

Relationship 1: $(x+p)$ is a common factor.

$\therefore\ p^2 - pq + r = 0$ A1

Relationship 2: The denominator is a perfect square.

$\therefore\ q^2 - 4r = 0$ A1

Question 3 (12 marks)

a.

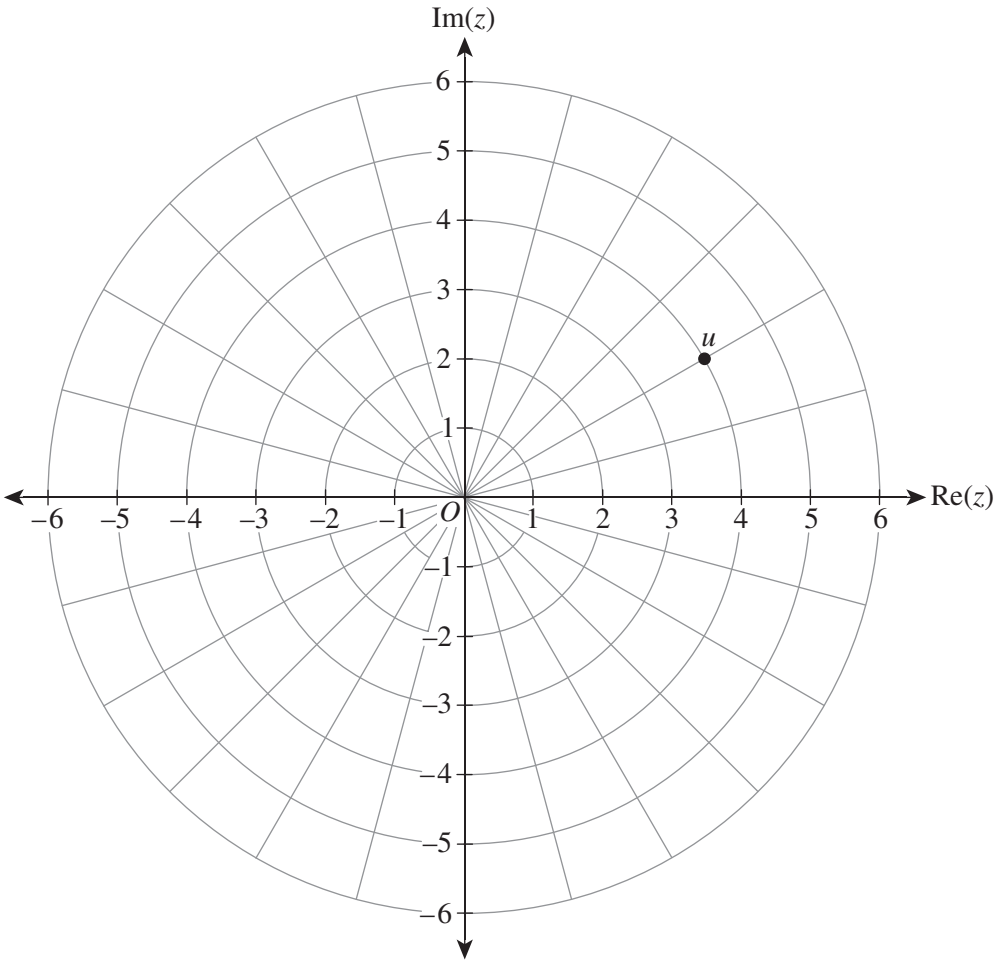

correct point A1

b. By the conjugate root theorem, the other solution is $2\sqrt{3}-2i$. A1

A quadratic equation with roots z_1 and z_2 can be written as $z^2-(z_1+z_2)z+z_1z_2=0$.

Therefore:

$$z^2-\left(2\sqrt{3}+2i+2\sqrt{3}-2i\right)z+\left(2\sqrt{3}+2i\right)\left(2\sqrt{3}-2i\right)=0$$

$$z^2-4\sqrt{3}z+16=0$$ A1

Copyright © 2023 Neap Education Pty Ltd

c. $|z-u|=2$ represents a circle with centre u and a radius of 2.

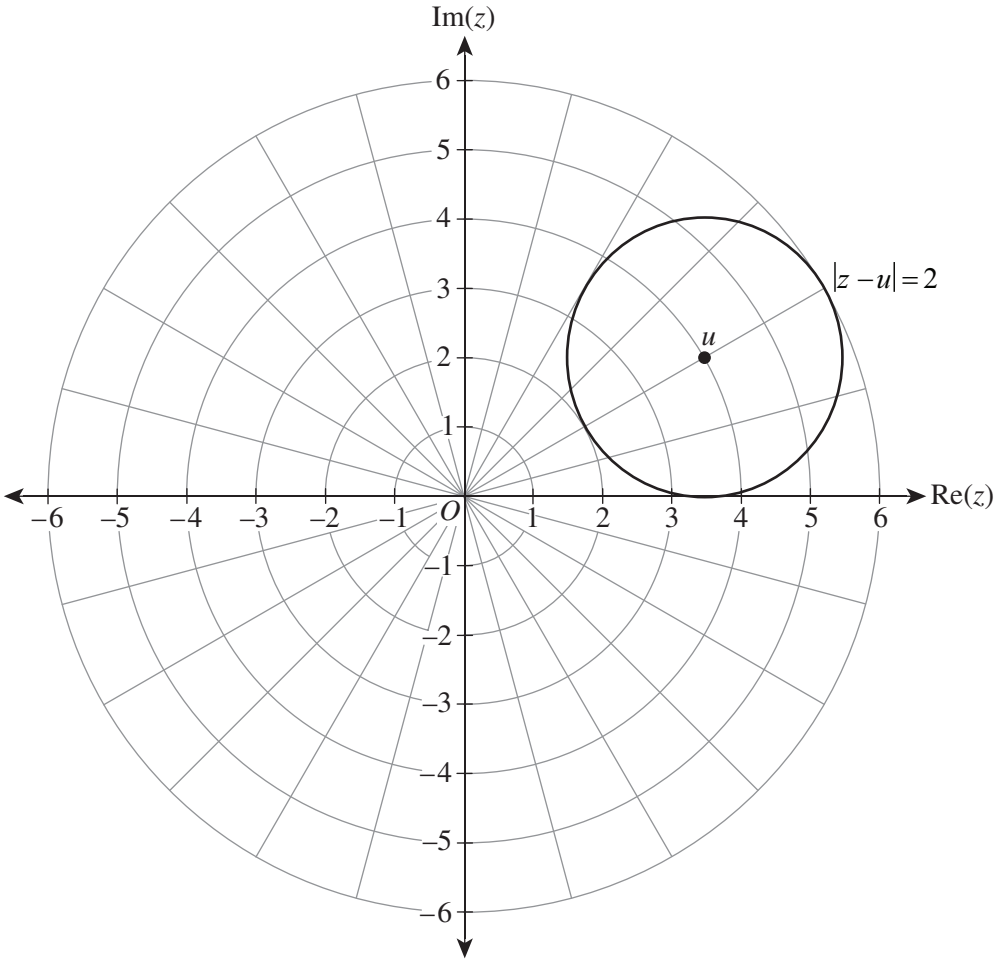

any circle with centre at point u A1

correct shape such that the circle is tangent to the grid at least three times A1

d. The equation of the circle is $\left(x-2\sqrt{3}\right)^2+(y-2)^2=4$. A1

Substituting $y = kx$ into the equation of the circle gives:

$\left(x-2\sqrt{3}\right)^2+(kx-2)^2=4$

As this will have two solutions, $\Delta > 0$. M1

$0<k<\sqrt{3}$ A1

$$\left(x-2\cdot\sqrt{3}\right)^2+\left(k\cdot x-2\right)^2=4$$

$$\left(k^2+1\right)\cdot x^2+\left(-4\cdot k-4\cdot\sqrt{3}\right)\cdot x+16=4$$

$$\text{solve}\left(\left(-4\cdot k-4\cdot\sqrt{3}\right)^2-4\cdot\left(k^2+1\right)\cdot 12>0,k\right)$$

$$0<k<\sqrt{3}$$

e. The area to be found can be illustrated as follows.

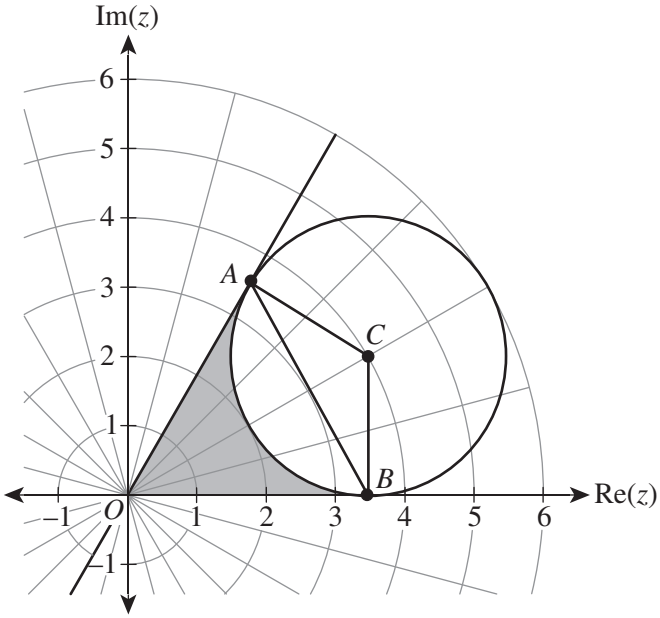

To find points A and B, it is necessary to look for the intersection of the circle with lines $y = \sqrt{3x}$ and $y = 0$, respectively.

Using a CAS calculator to find the x-coordinates gives:

$\text{solve}\left(\left(x-2\cdot\sqrt{3}\right)^2+\left(\sqrt{3}\cdot x-2\right)^2=4,x\right)$	$x=\sqrt{3}$
$\text{solve}\left(\left(x-2\cdot\sqrt{3}\right)^2+\left(0\cdot x-2\right)^2=4,x\right)$	$x=2\cdot\sqrt{3}$

$A = \left(\sqrt{3}, 3\right),\ B = \left(2\sqrt{3}, 0\right)$ A1

Finding $\angle ABC$ gives:

$\angle O = 60°,\ \angle OAC = \angle OBC = 90°$

$\therefore \angle ACB = 120° = \dfrac{2\pi}{3}$ A1

Therefore:

$OC = 4,\ AB = 2\sqrt{3}$

$$\text{area}_{OABC} = \frac{1}{2} \times OC \times AB$$
$$= 4\sqrt{3}$$ A1

$$\text{area}_{\widehat{CAB}} = \frac{1}{2} \times \angle ACB \times \text{radius}^2$$
$$= \frac{4\pi}{3}$$

$$\text{area} = 4\sqrt{3} - \frac{4\pi}{3}$$ A1

Note: A diagram is not required to obtain full marks.

Copyright © 2023 Neap Education Pty Ltd

Question 4 (12 marks)

a. To calculate the arc length, it is necessary to find the start and end values of x by substituting the start and end values of y.

When $y = 0$:

$0 = \log_e\left(x^2 - 4\right)$

$x = \sqrt{5}$

When $y = 3$:

$3 = \log_e\left(x^2 - 4\right)$

$x = \sqrt{e^3 + 4}$

correct domain A1

Note: From the domain restrictions of the graph, the positive x-values should be chosen.

Therefore:

$$\int_{\sqrt{5}}^{\sqrt{e^3+4}} \sqrt{1+\left[f'(x)\right]^2}\,dx = 4.1775$$ A1

solve(f(x)=0,x)	$x=-\sqrt{5}$ or $x=\sqrt{5}$
solve(f(x)=3,x)	$x=-\sqrt{e^3+4}$ or $x=\sqrt{e^3+4}$
$\int_{\sqrt{5}}^{\sqrt{e^3+4}} \sqrt{1+\left(\frac{d}{dx}(f(x))\right)^2}\,dx$	4.1775

b. $y = \log_e\left(x^2 - 4\right)$

$x^2 - 4 = e^y$

$x^2 = e^y + 4$

Therefore:

$$V = \pi\int_0^h x^2\,dy$$

$$= \pi\int_0^h \left(e^y + 4\right)dy$$ A1

$$= \pi\left(e^h + 4h - 1\right)$$ A1

$\pi\cdot\int_0^h \left(e^y+4\right)dy$	$\left(e^h+4\cdot h-1\right)\cdot\pi$

c. The container's maximum volume is achieved when the water is at its maximum height; that is, $h = 3$.

Therefore, half of the maximum volume is:

$$V(h) = \frac{1}{2} \times V(3) \qquad \text{M1}$$

$$= \frac{1}{2} \times \left(\pi\left(e^3 + (4 \times 3) - 1\right)\right)$$

$$h = 2.10 \text{ m} \qquad \text{A1}$$

$v(h):=\left(e^h+4\cdot h-1\right)\cdot \pi$	*Done*
⚠ $\text{solve}\left(v(h)=\frac{1}{2}\cdot v(3),h\right)$	$h=2.09808$

Note: Consequential on answer to ***Question 4b.***

d. $$\frac{dV}{dt} = \frac{dV}{dh} \times \frac{dh}{dt} \qquad \text{M1}$$

$$\frac{dV}{dt} = -2\sqrt{h}$$

$$\frac{dV}{dh} = \pi\left(e^h + 4\right)$$

$$-2\sqrt{h} = \pi\left(e^h + 4\right) \times \frac{dh}{dt} \qquad \text{A1}$$

$$\frac{dh}{dt} = -\frac{2\sqrt{h}}{\pi\left(e^h + 4\right)}$$

$$\frac{dt}{dh} = -\frac{\pi\left(e^h + 4\right)}{2\sqrt{h}}$$

$$t = \int_3^0 -\frac{\pi\left(e^h + 4\right)}{2\sqrt{h}} dh \qquad \text{M1}$$

$$= 44.7 \text{ min} \qquad \text{A1}$$

$$\text{solve}\left(\int_0^t 1 \, dt = \int_3^0 \frac{-\pi\cdot\left(e^h+4\right)}{2\cdot\sqrt{h}} \, dh, t\right)$$

$t=44.7403$

Copyright © 2023 Neap Education Pty Ltd

e. Expressing the rate, r, as a function of h gives:

$$r(h)=\frac{-2\sqrt{h}}{\pi\left(e^{h}+4\right)}$$

Differentiating $r(h)$ to find the maximum gives:

$$\frac{d}{dh}r(h)=0$$

$$h=1.14 \text{ m}$$ A1

Substituting $h = 1.14$ into $r(h)$ gives:

$r(1.14) = -0.10$

Therefore, the maximum rate is 0.10 m/min. A1

$r(h):=\frac{-2\cdot\sqrt{h}}{\pi\cdot\left(e^{h}+4\right)}$	*Done*
⚠ $\text{solve}\left(\frac{d}{dh}(r(h))=0,h\right)$	$h=1.13978$
$r(1.13978)$	-0.095376

Question 5 (11 marks)

a. The graph has vertical asymptotes when $2\sin(x) + 1 = 0$.

$$x=-\frac{\pi}{6}+2\pi k,\ x=\frac{7\pi}{6}+2\pi k,\ k\in Z$$ A1

b.

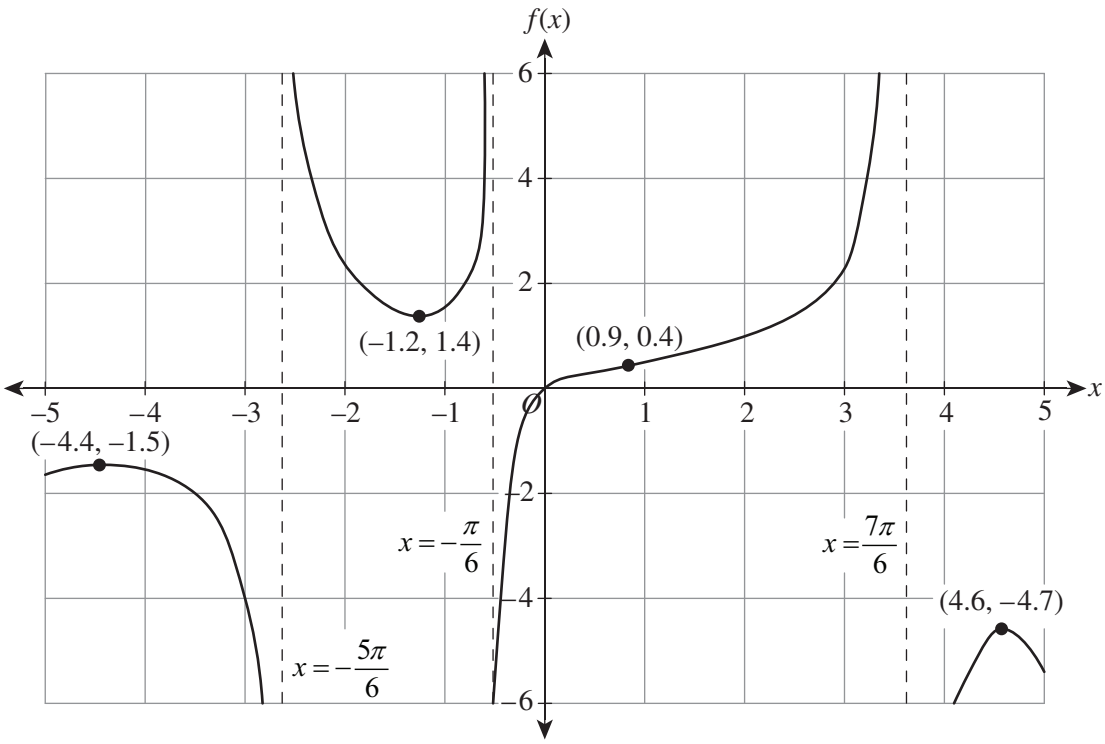

accurate sketch A1
correct shape A1
correct key points A1
correct asymptotes A1

c. $f(x) = p(x)$

$$\frac{1}{2\sin(x)+1}x = p(x)$$

Letting $m = \dfrac{1}{2\sin(x)+1}$ and using $-1 \le 2\sin(x) + 1 \le 3$ gives:

$m \le -1$ or $m \ge \dfrac{1}{3}$ M1

If $f(x) = p(x)$ has only $x = 0$ as a solution, then m and p have no intersection.

Hence, $-1 < p < \dfrac{1}{3}$. A1

Sketching the graph using a CAS calculator gives:

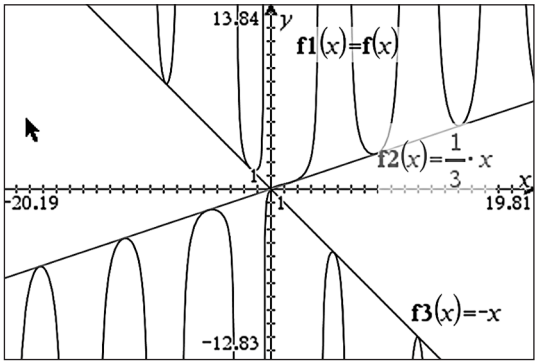

d. **i.** If the denominator has no zeroes, then $g(x)$ has no asymptotes.

Since $-1 \le \sin(x) \le 1$ and $k > 0$:

$$-k \le k\sin(x) \le k$$

$$-k + 1 \le k\sin(x) + 1 \le k + 1$$

For no asymptotes:

$$-k + 1 > 0$$

$$k < 1$$ A1

ii. The equations of the tangent lines are $y = \dfrac{1}{1-k}x$ and $y = \dfrac{1}{1+k}x$. A1

Given that the angle between the tangent lines is 30°:

$$\frac{\dfrac{1}{1-k} - \dfrac{1}{1+k}}{1 + \dfrac{1}{1-k^2}} = \tan(30°)$$

$$= \frac{1}{\sqrt{3}}$$ M1

As $k > 0$, $k = \sqrt{5} - \sqrt{3}$. A1

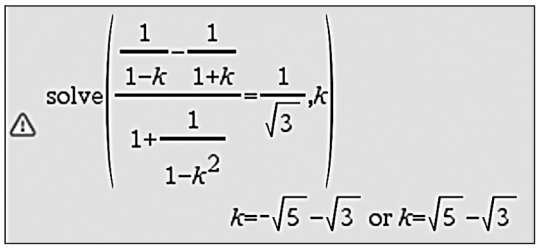

Copyright © 2023 Neap Education Pty Ltd

Question 6 (9 marks)

a. $\overline{X} \sim N\left(3200, \left(\frac{430}{\sqrt{7}}\right)^2\right)$ M1

$\Pr\left(\overline{X} > 3500\right) = 0.032$ A1

```
normCdf(3500,∞,3200,430/√7)        0.032455
```

b. $T \sim N\left(7 \times 3200, \left(430 \times \sqrt{7}\right)^2\right)$ M1

$\Pr(T > 22\,500) = 0.465$ A1

```
normCdf(22500,∞,7· 3200,430· √7)
                                   0.464979
```

c. Bakery: $B \sim N\left(3200, 430^2\right)$

Grocery store: $G \sim N\left(3600, 840^2\right)$

$G - B \sim N\left(400, 430^2 + 840^2\right)$ M1

$\Pr(G - B > 0) = 0.664$ A1

```
normCdf(0,∞,400,√(430²+840²))      0.664173
```

d. **i.** H_0: $\mu = 3600$

H_1: $\mu < 3600$

both hypotheses A1

ii. p-value $= \Pr(G < 3440)$

$= 0.1971...$ A1

Since p-value $\not< 0.05$, H_0 should be accepted. A1

```
normCdf(-∞,3440,3600,840/√20)      0.197153
```

Copyright © 2023 Neap Education Pty Ltd